DEFOND

EMG Series

IP67 Miniature Micro switch

Features

-Single pole double throw with momentary ON micro-signal switch
-Dust and water-proof: IP67
-Connectors: PCB terminal
-Gold-plated contact
-Optional lever

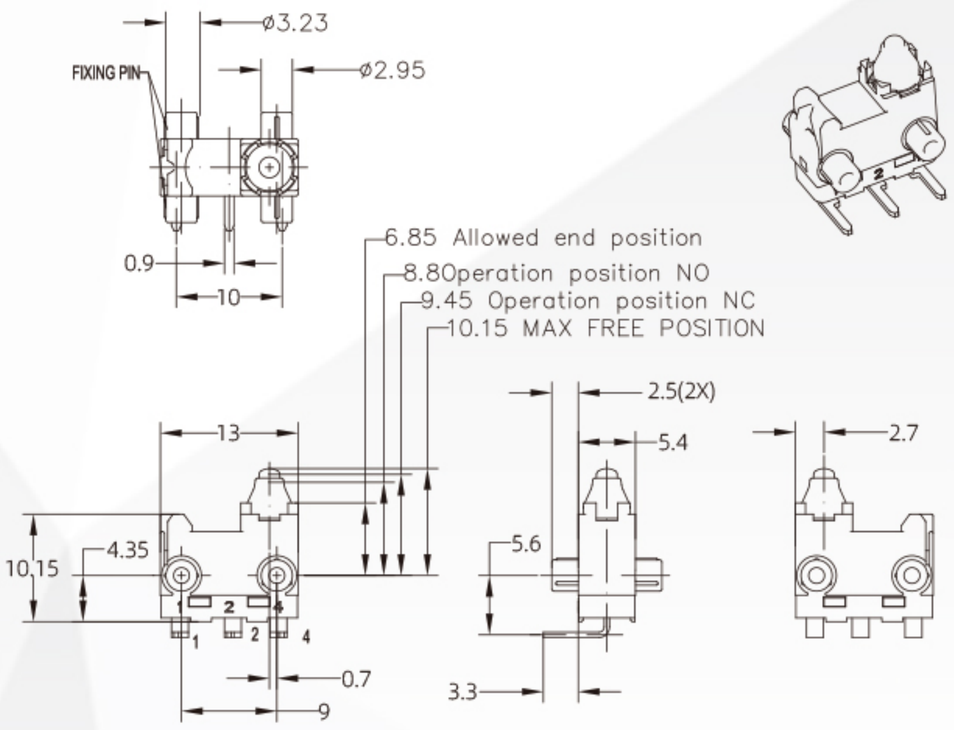

Specifications

-UL61058 and ENEC : 100mA 42VDC μ 50000 cycles IP67;
20mA 42VDC μ 200K cycles IP67
-Insulation resistance : ≥ 50MΩ
-Contact resistance : ≤ 50mΩ

Typical applications

Kitchenware appliances	Floorcare appliances
Coffee machine	Vacuum cleaner

EMG

Terminals	Housing	Double Combination	Recommend hole pattern
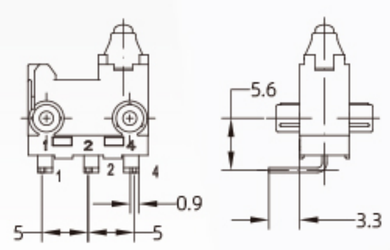	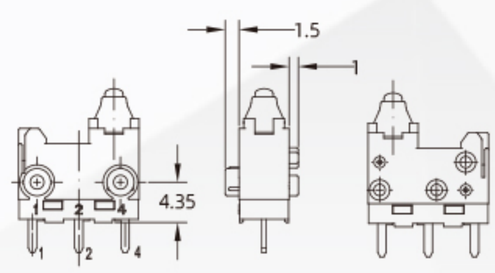	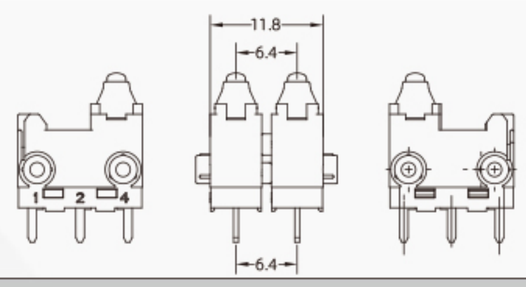	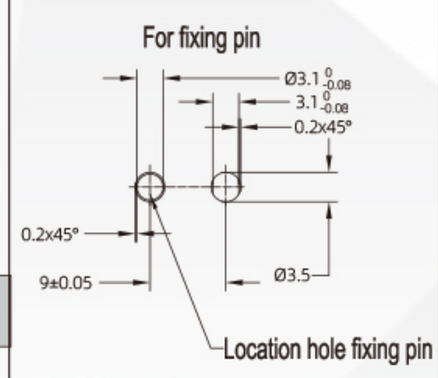
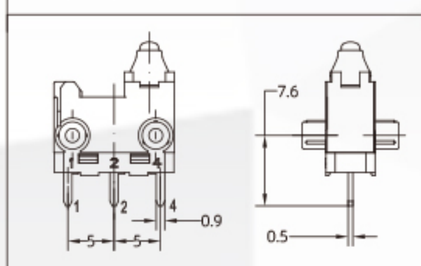	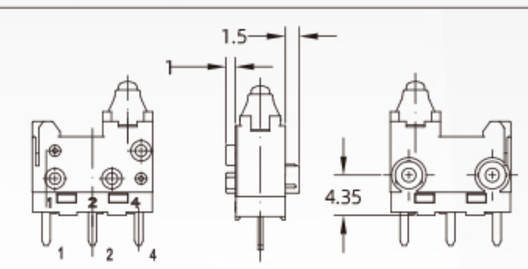	Circuit 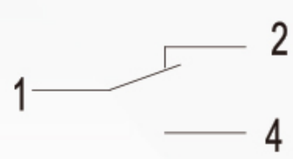	For PCB terminals

Matrix Guide

					Terminal Type	Certification	
	Voltage	Current	Number of Throws	IP Class	PCB	ENEC	UL61058
NC.+NO.							
EMG-NG-001	30VDC	100mA	1	IP67	√	√	√